NOTES:

11.1 FURR SIDES & SOFFITS AS REQ'D TO COVER CONNS. W/ GYP. BD. – TYPICAL.

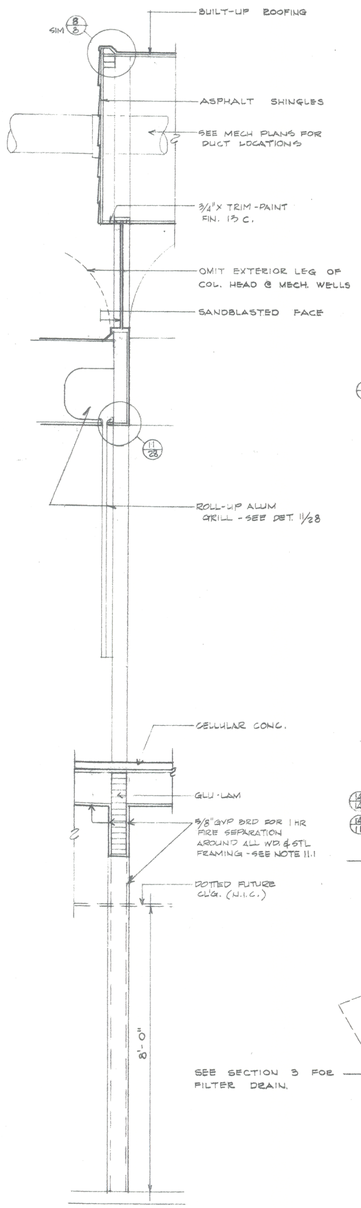

5

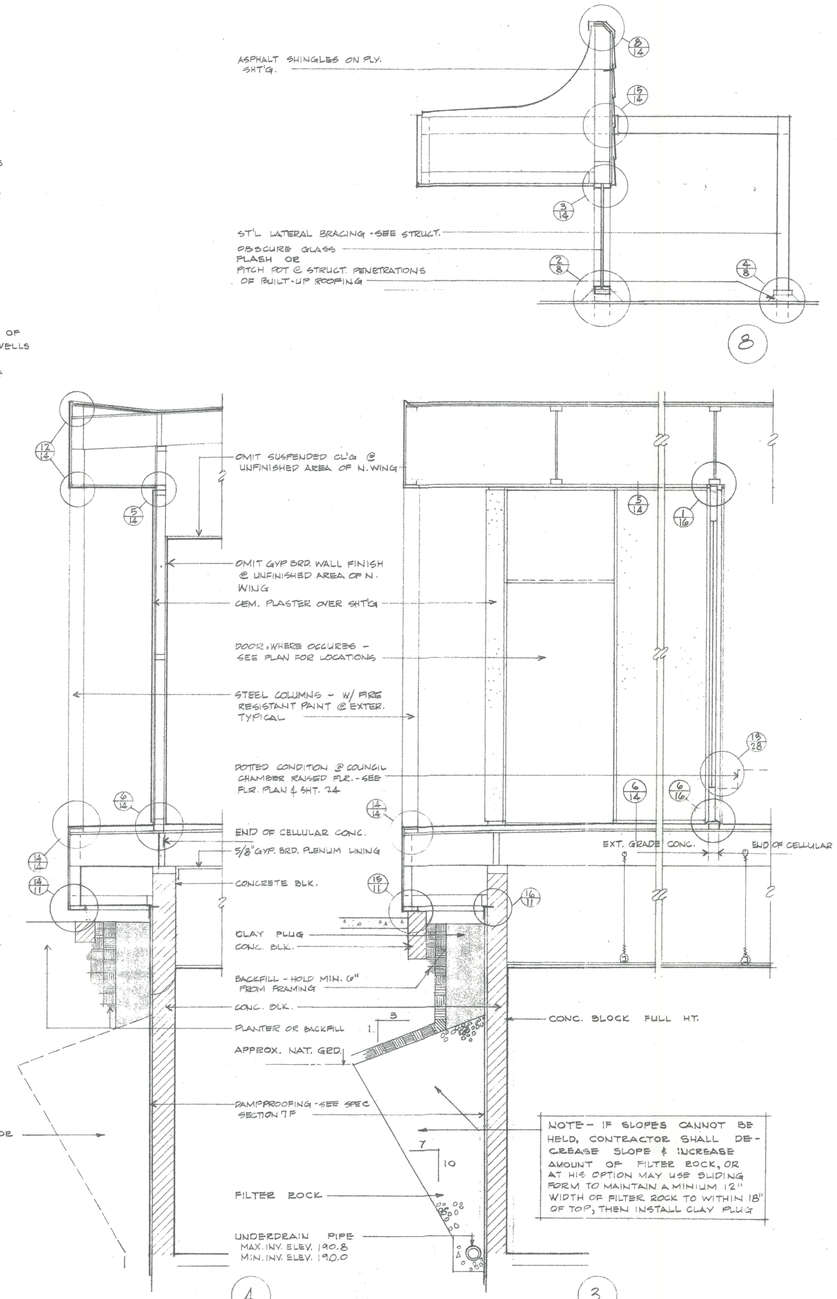

4 3

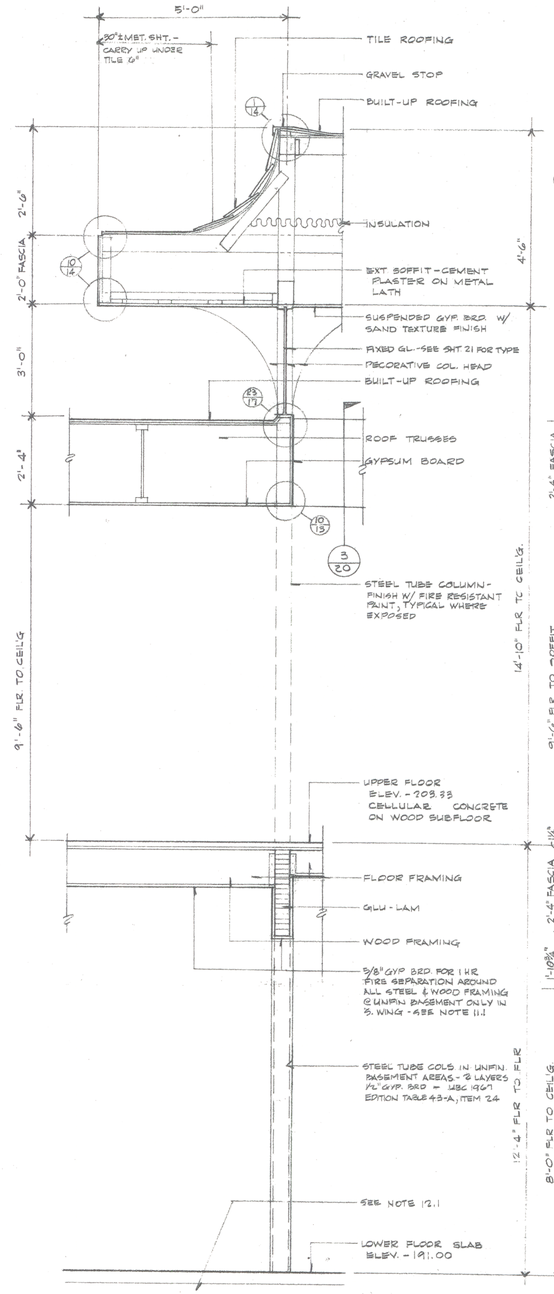

2

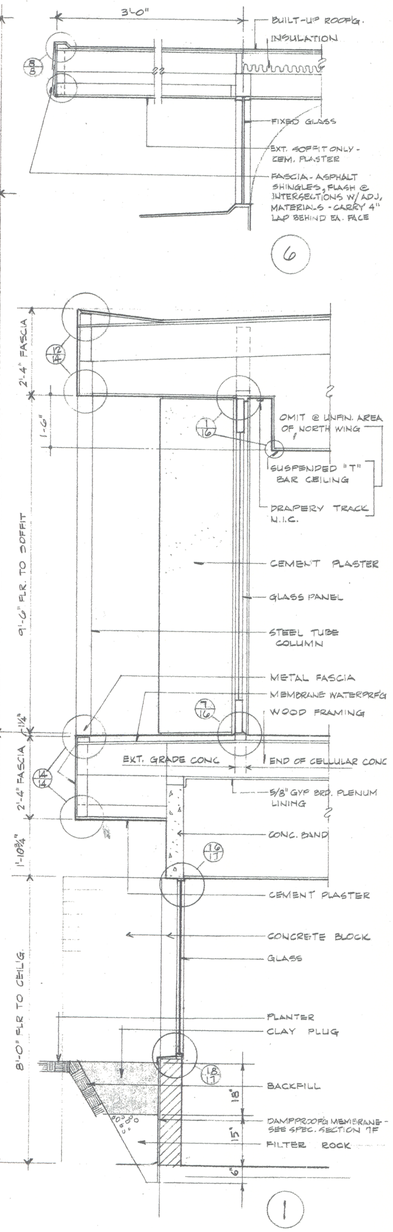

1

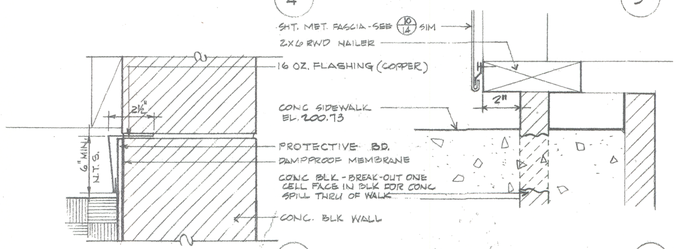

DAMPROOFING & FLASHG 16
3" = 1'-0"

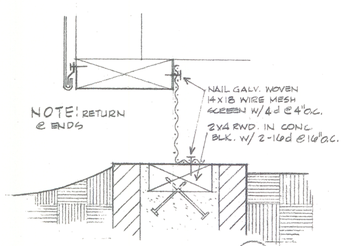

WALK EDGE @ BLDG. 15
3" = 1'-0"

VENT SCREEN 14
3" = 1'-0"

WALL SECTIONS
SCALE 1/2" = 1'-0"

JOB:	67-188
DATE:	3-23-70
DRAWN:	PAS
CHECKED:	
APPROVED:	

REVISIONS

THE OFFICE OF
WILLIAM W. HEDLEY JR.
architect a.i.a.
346 E. CAMPBELL AVE.
CAMPBELL, CALIFORNIA
C-2713
379-7404

CAMPBELL CITY HALL
CAMPBELL, CALIFORNIA

SHEET NO.
11
OF 28