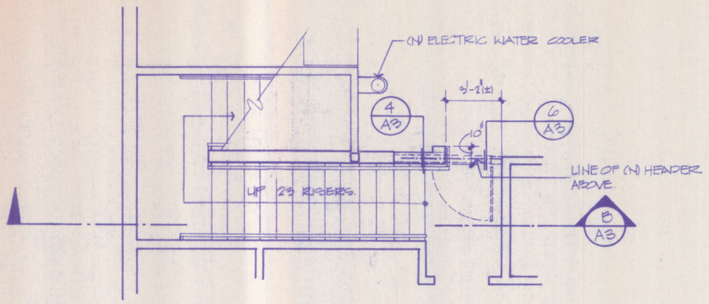

8 DOWNSTAIRS PLAN

SCALE: ¼" = 1'-0"

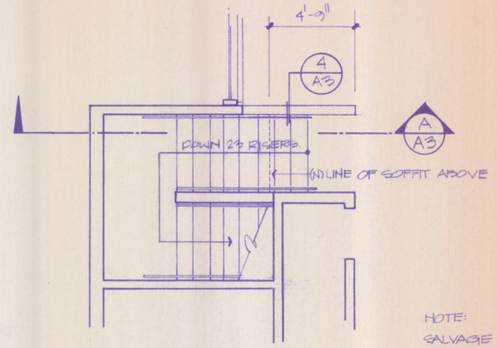

7 UPSTAIRS PLAN

SCALE: ¼" = 1'-0"

NOTE:
SALVAGE VINYL WALL COVERING TO COVER (N) STAIR CONSTRUCTION.

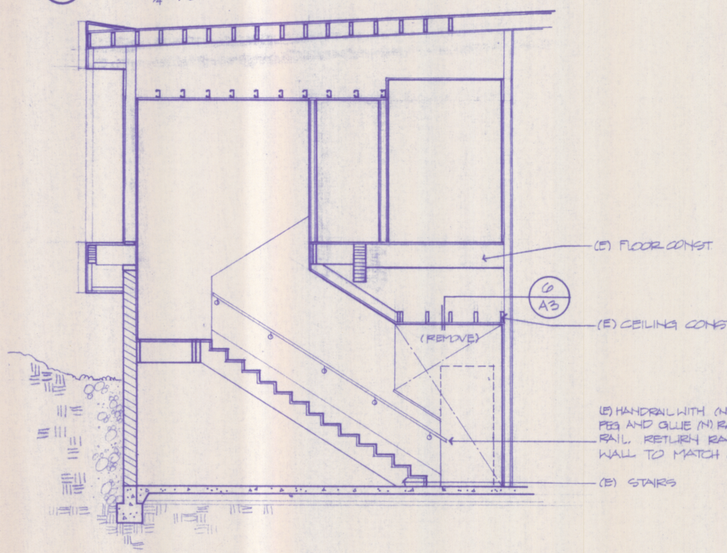

B DOWNSTAIRS SECTION

SCALE: ¼" = 1'-0"

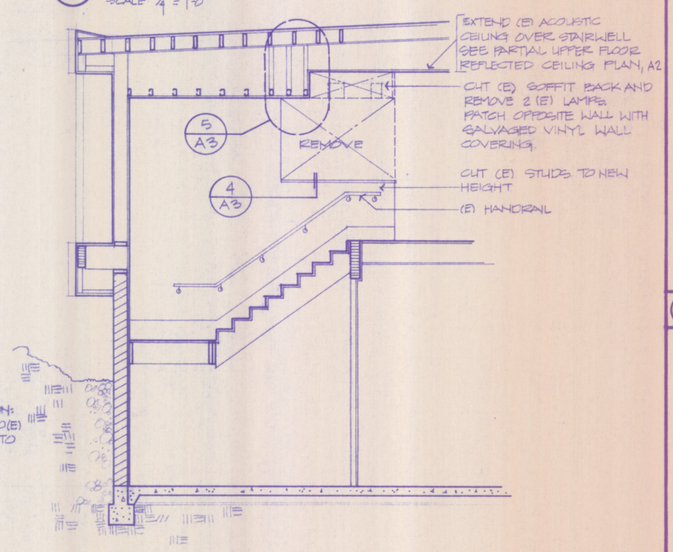

A UPSTAIRS SECTION

SCALE: ¼" = 1'-0"

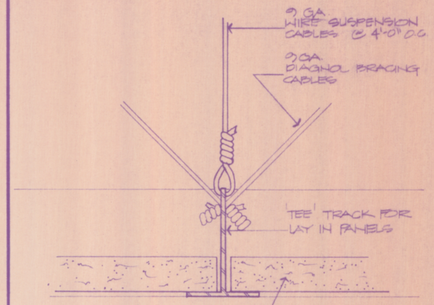

1 LAY-IN CEILING

FULL SCALE

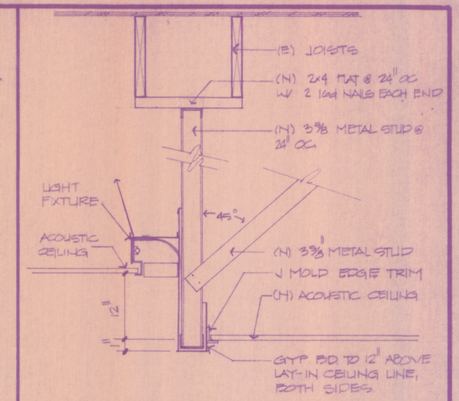

2 SOFFIT DETAIL

1"

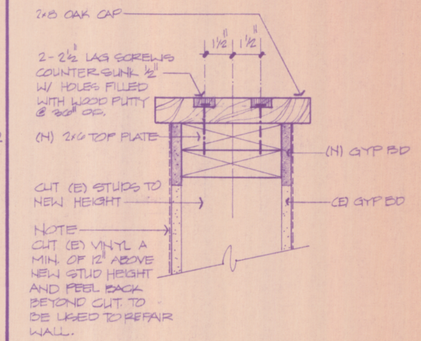

4 GUARDRAIL CAP

3"

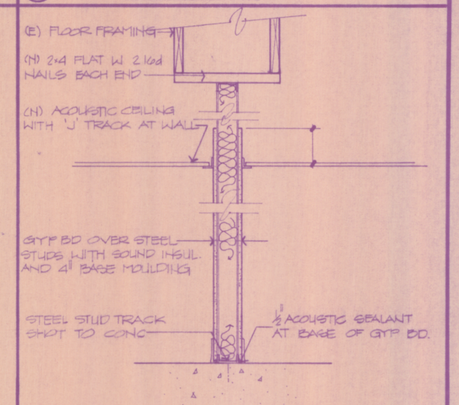

3 TYP WALL SECTION

1"

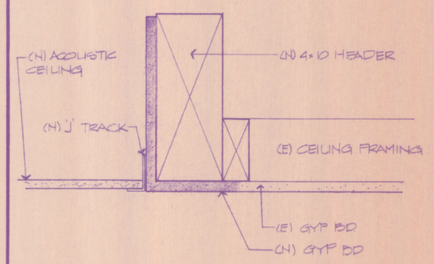

6 HEADER DETAIL

3"

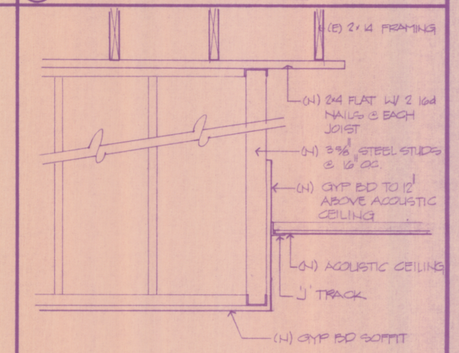

5 STAIRWELL SOFFIT DETAIL

1"

NO.	REVISION	BY	APPR'D	DATE

Jensen, Johnson & Associates
Landscape Architecture: Architecture: Site Planning
161 Jackson Street, San Jose, California 95112
Telephone (408) 280-0376

DESIGNED	W.O.
DRAWN	L.B.
CHECKED	T.B.

COUNTY OF SANTA CLARA CALIFORNIA

CAMPBELL LIBRARY REMODEL

70 CENTRAL AVENUE, CAMPBELL

SUBMITTED : APPROVED :

DETAILS

SHEET NO. A3 OF SHEETS

DATE

FILE NO.